Furniture

Technical Data Information

R.T. LARGE
ESTABLISHED 1969

Product Code: **LOT80FW**

Product Discription: **800 Floor standing 2-drawer unit white**

Overall Dimensions: **H: 800 W: 796 D: 445 L:**

Additional Information:

Country of Origin:	China
Fitting Instruction:	No
CE Certification:	No
Product Material:	
Colour/Finish:	Satin White
Construction Method:	Cam & Wood Dowel
Construction Type:	Rigid
Fascia Thickness:	18
Cabinet Thickness:	18
Drawer Included:	Yes
Fixing Included:	Yes
Waste Shroud:	Yes
Handle Type:	Inset

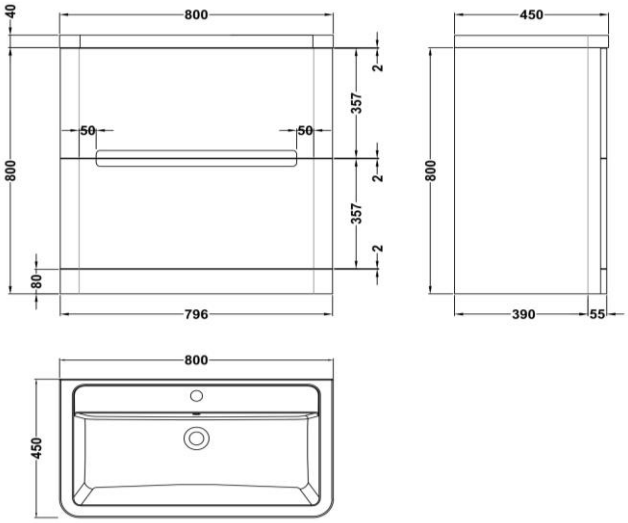

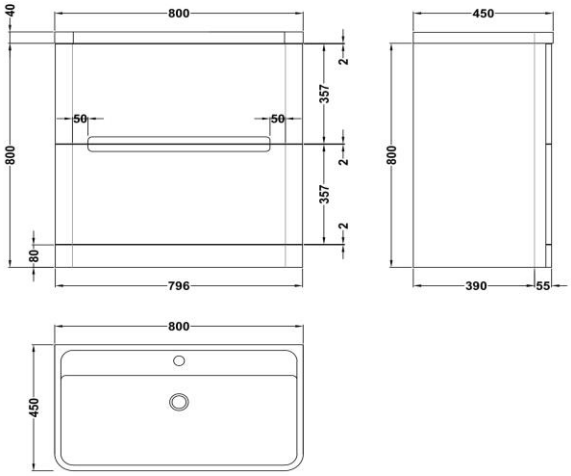

All Dimensions are in millimetres. The information contained on this page was correct at date of issue. Fitting dimensions are provided as a guide only. Some variation may occur due to manufacturing tolerances. We pursue a policy of continuing improvement in design and performance of our products and so reserve the right to change specifications without prior notice.